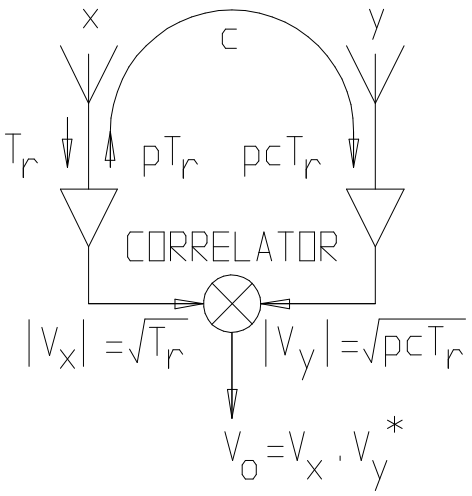
x
y
c
T_r
pT_r
pcT_r
CORRELATOR
$|V_x| = \sqrt{T_r}$
$|V_y| = \sqrt{pcT_r}$
$V_o = V_x \cdot V_y^*$