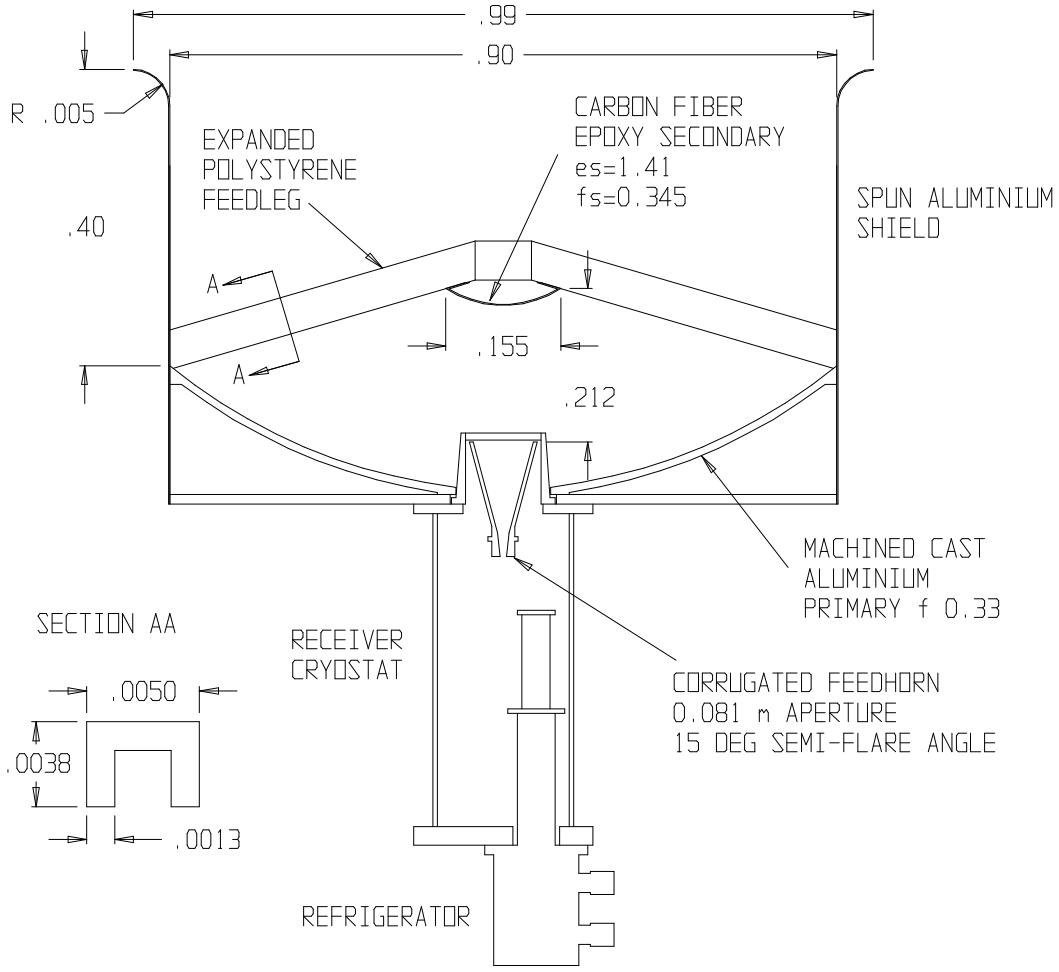
.99
.90
R .005
.40
EXPANDED
POLYSTYRENE
FEEDLEG
CARBON FIBER
EPOXY SECONDARY
es=1.41
fs=0.345
SPUN ALUMINIUM
SHIELD
A
A
.155
.212
MACHINED CAST
ALUMINIUM
PRIMARY f 0.33
SECTION AA
RECEIVER
CRYOSTAT
.0050
.0038
.0013
CORRUGATED FEEDHORN
0.081 m APERTURE
15 DEG SEMI-FLARE ANGLE
REFRIGERATOR