Lynx Instrument Specifications & Requirements: Part 1. HDXI and XGS

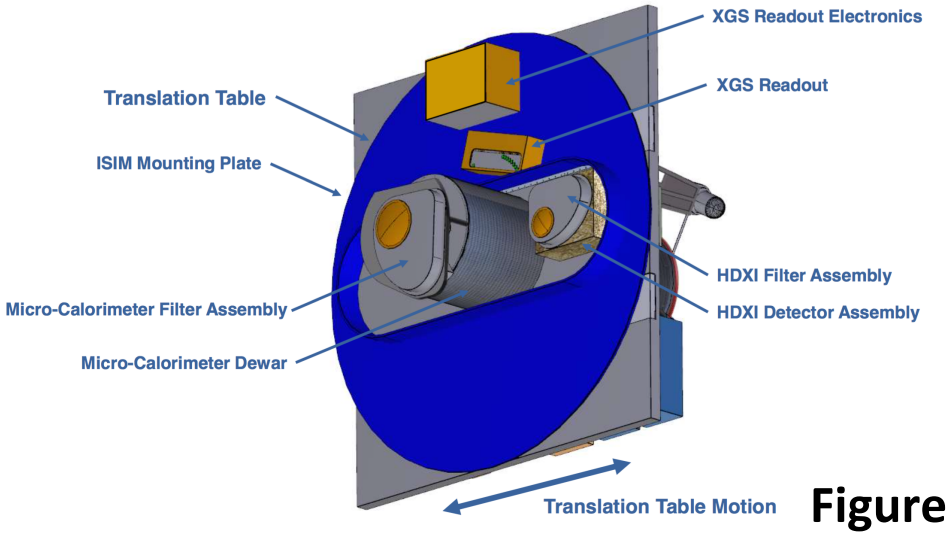

Figure: MSFC ACO

Mark Bautz on behalf of the Lynx IWG

January 25, 2018

Overview

- Motivation & Request
- Instrument specifications
- Missing requirements & potential science drivers for HDXI and XGS

Traceability is important

Instrument requirements should be traceable to science requirements:

- To ensure that the science goals will be met
- To minimize instrument & observatory costs
- To inspire confidence & approval in reviewers
  - See Red Team assessment

Instrument specifications should be traceable to instrument requirements for the same reasons

Instrument Requirements Status

- Lynx science pillars drive some, but not all, instrument functional & performance requirements
- Lynx instruments have been specified in some detail
  - These specs have been used in costing exercises
- Some specs are unconstrained by science and/or instrument requirements
- A few specs remain TBD

Request

- The IWG requests that the STDT establish a few additional science requirements to
  - Justify (or revise) instrument specs now set solely by IWG
  - Help set a few instrument specs that are still TBD
- This info will strengthen our case for Lynx by
  - Maximizing Lynx science per dollar
  - Increasing our credibility with the Decadal Survey

LYNX INSTRUMENT SPECIFICATIONS

(EXAMPLE: SEE SPEC SECTION FOR FULL SET USED FOR COSTING)

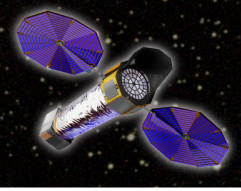

HDXI Specs

EXAMPLE. Find full set (8 such tables for 3 instruments) in final section)

HDXI Parameter	Requirement (Red-Team Interim Report)	Requirement Traceability Status	Science Drivers	Notes
Energy Range (keV) Minimum Maximum	 0.2 10	 OK To be discussed	 Sensitivity to high-z sources TBD	
Quantum Efficiency (keV) (incl. Optical Blocking Filter)	≥0.85 0.5–7 >TBD, 0.15–0.5	Derived	See Energy Range	Intent: Consistent with SWG simulations
Field of view	22 arcmin x 22 arcmin (4k x 4k pixels)	OK	Deep Survey efficiency	Intent: Cover <1" FOV of optics (nominally θ < 10 arcmin)
Pixel size (μm)	16 x 16	OK	Source sensitivity/XGS resolution	Actual reqt is on event location accuracy
Read noise (rms)	≤ 4 e^-	Derived		From low-E QE + Energy resolution
Energy Resolution@ 277 eV	~70 eV (FWHM)	To be discussed	XGS rrder separation/Low E. detection eff.	HDXI & XGS should have distinct reqts
Energy Resolution@ 5.9 keV	< 150 eV (FWHM)	To be discussed	TBD	
Max. count-rate capability Full-field & Window modes	 TBD	To be discussed	Max. source flux to be observed	Issue is pileup of single source
Time resolution/accuracy Full-field mode Window mode	 20 ms/TBD 200 μs/TBD	To be discussed	TBD	NB: Timing accuracy not specified in interim report
Max. full-field event rate	>8000 cts s^{-1}	To be discussed	TBD	For all sources in field (ext. sources)
Frame Rate Full-field mode Window mode (20x20" FOV)	 > 100 frames s^{-1} > 10000 windows s^{-1}	Derived	TBD	Derived from ax ct rate & time resolution
Instrumental background	< TBD	Derived		Intent: consistent with SWG simulations
Filling factor/ chip gap	>TBD	Derived		From dither and Deep Survey FOV
Detector location tolerance	TBD	Derived		From angular resolution budget
Radiation tolerance	10 yrs at L2	Derived		
Optical/UV Blocking	TBD	Derived		Mainly from environment

HDXI Detector Assembly

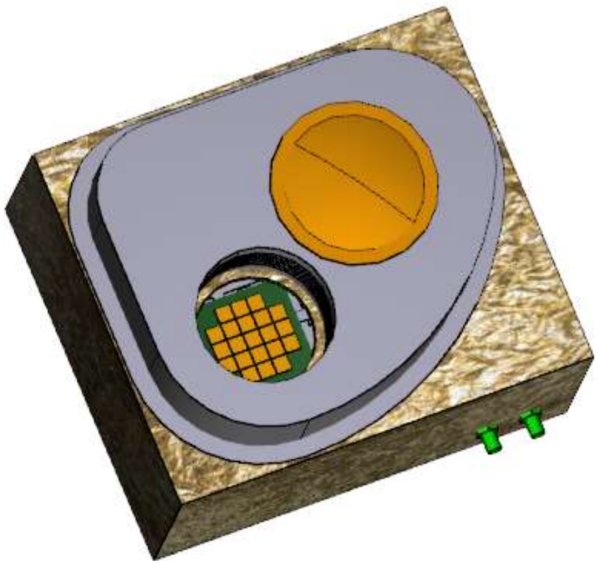

OPG XGS Grating Array

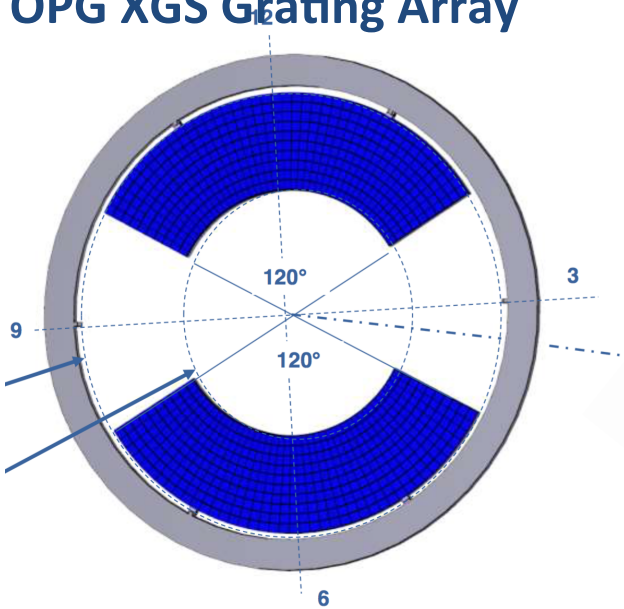

CAT XGS Readout

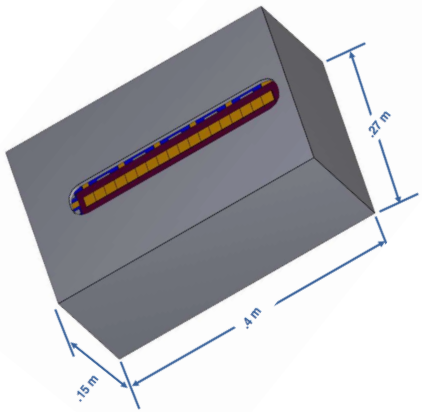

Figures: MSFC ACO

MISSING REQUIREMENTS & POTENTIAL SCIENCE DRIVERS: HDXI AND XGS

Missing Requirements for HDXI

Requirements needed/ Potential science drivers	Current spec	Implied current capability/ remarks
Max. count-rate capability: • How bright a source must be observable without pileup? Time resolution: • How precisely must photons be time-tagged?	100 frames/s	2.5% pileup at f_x = 8e-13 cgs, 0.5-2 keV (~8x brighter than Chandra) 20 ms (320x better than Chandra)
Effective area at E > ~4 keV: What HDXI precision is needed for • AGN Fe K diagnostics; • Cluster abundance precision; • Non-thermal process studies?	A_{eff}= 1300 cm^2 @ 6 keV	To be identified*
Spectral Resolution: What HDXI precision is needed for: • kT of cooler plasmas; • C,N,O abundances; • etc ?	~70 eV FWHM @ 277 eV; 150 eV @ 6 keV	Sufficient for XGS order separation (TBC). *From in-hand or new sims

Missing Requirements for XGS

Requirements needed/ Potential science drivers	Current spec	Implied current capability/remarks
Effective area & resolving power near 2 keV (high-energy limit): • Which lines, for what science, should drive requirements here (e.g Si XIII for absorber metallicty)	A_{eff}~4000 cm^2 R≥ 5000 0.2 < E <2 keV	To be identified*
Effective area & resolving power near 0.2 keV (low-energy limit): • What are **max. z** & sensitivity at which CVI EW for hot halos/warm absorbers/whim		EW_{min} as estimated by SWG at OVII, OVIII, CVI
Is R=10,000 required? • What additional science is gained from better thermal width, velocity & broadening info?		To be identified*
What transitions *besides* CVI, OVII, OVIII, should drive XGS design and with what precision must these be measured?		To be identified*

*From in-hand or new sims

Missing Requirements for LXM

Simon's Talk

Summary of Key Needs for HDXI & XGS

HDXI needs science-driven requirements for:

- Count-rate capability / time resolution
- Sensitivity (A_{eff}) above ~4 keV
- Spectroscopic capabilities esp. at E < ~1 keV

XGS needs science-driven requirements :

- For sensitivity (e.g. EW_{min}) at bandpass extremes
- For sensitivity at additional critical lines, over redshift ranges (besides CVI, OVII, OVIII)
- For line location & shape driving R=10,000

LYNX INSTRUMENT SPECIFICATIONS

(FULL SET SUBMITTED TO RED TEAM & USED FOR COSTING)

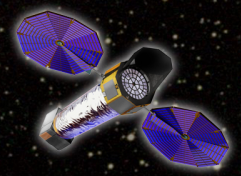

HDXI Specs

HDXI Parameter	Requirement (Red-Team Interim Report)	Requirement Traceability Status	Science Drivers	Notes
Energy Range (keV) Minimum Maximum	 0.2 10	 OK To be discussed	 Sensitivity to high-z sources TBD	
Quantum Efficiency (keV) (incl. Optical Blocking Filter)	≥0.85 0.5–7 >TBD, 0.15–0.5	Derived	See Energy Range	Intent: Consistent with SWG simulations
Field of view	22 arcmin x 22 arcmin (4k x 4k pixels)	OK	Deep Survey efficiency	Intent: Cover <1" FOV of optics (nominally θ < 10 arcmin)
Pixel size (μm)	16 x 16	OK	Source sensitivity/XGS resolution	Actual reqt is on event location accuracy
Read noise (rms)	≤ 4 e^-	Derived		From low-E QE + Energy resolution
Energy Resolution@ 277 eV	~70 eV (FWHM)	To be discussed	XGS rrder separation/Low E. detection eff.	HDXI & XGS should have distinct reqts
Energy Resolution@ 5.9 keV	< 150 eV (FWHM)	To be discussed	TBD	
Max. count-rate capability Full-field & Window modes	 TBD	To be discussed	Max. source flux to be observed	Issue is pileup of single source
Time resolution/accuracy Full-field mode Window mode	 20 ms/TBD 200 μs/TBD	To be discussed	TBD	NB: Timing accuracy not specified in interim report
Max. full-field event rate	>8000 cts s^{-1}	To be discussed	TBD	For all sources in field (ext. sources)
Frame Rate Full-field mode Window mode (20x20" FOV)	 > 100 frames s^{-1} > 10000 windows s^{-1}	Derived	TBD	Derived from ax ct rate & time resolution
Instrumental background	< TBD	Derived		Intent: consistent with SWG simulations
Filling factor/ chip gap	>TBD	Derived		From dither and Deep Survey FOV
Detector location tolerance	TBD	Derived		From angular resolution budget
Radiation tolerance	10 yrs at L2	Derived		
Optical/UV Blocking	TBD	Derived		Mainly from environment

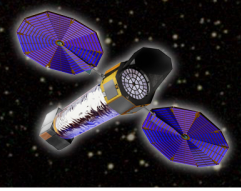

XGS System Specs

XGS System Parameter	Requirement (Red-Team Interim Report)	Requirement Traceability Status	Science Drivers	Notes
Energy Range (keV) Minimum Maximum	 0.2 2	 OK To be discussed	 Sensitivity to red-shifted CVI in abs. TBD	See effective area To what z?
Effective area (cm^2)	TBD @ 0.2 keV TBD @ 0.6 keV TBD @ 2 keV	To be discussed	Min. detectable EW	Driving lines and max z should be ID'ed Intent: consistency with SWG assumptions
Spectral Resolving Power	>5000	To be discussed	Min detectable EW; reqts for thermal width detection , velocity accuracy?	Driving ines and max z should be ID'ed Is R=10,000 needed?
Line-spread function width	1"	derived	See spectral Resolving Power	
Cross-dispersion field of view	5.6 arcmin	To be discussed	TBD	Is HDXI chip size ok or required?
Max. count-rate capability Single line Full spectrum	 TBD 8000 ct s^{-1}	To be discussed	 Max. line flux to be observed (TBD) Max source flux to be observed	HDXI rate may be an over-specification
Time resolution	200 ms	To be discussed	TBD	HDXI rate may be an over-specification
Timing accuracy[a]	To within 0.1 s	To be discussed	TBD	Relative to UTC; guess
Instrumental background on orbit (0.5–2.0 keV)	< TBD cts s^{-1} $arcsec^{-2}$ keV^{-1}	Derived		Intent: Consistent with SWG assumptions
Max. Spectral Gaps	>TBD	Derived		From QE, dither, etc.

XGS Readout Specs

XGS Readout Parameter	Requirement (Red-Team Interim Report)	Requirement Traceability Status	Science Drivers	Notes
Energy Range (keV) Minimum Maximum	 0.2 2	 OK To be discussed	 Sensitivity to red-shifted CVI in abs. TBD	See effective area To what z?
Quantum Efficiency (keV) (incl. Optical Blocking Filter)	TBD	Derived	See XGS Effective Area	Intent: Consistent with SWG assumptions
Field of view Cross-dispersion Along-dispersion	 5.6 arcmin 22-50.4 arcmin	Derived	See XGS cross-dispersion FOV	Is HDXI chip size ok? Readout length depends on grating type
Readout Pixel size (μm)	16.x 16	Derived	See XGS resolving power	Resolve 1" optical LSF
Readout noise (rms)	≤ 4 e^-	Derived	See XGS effective area (low-E QE & order sep)	
Readout Energy Resolution@ 277 eV	~80 eV (95% encl. energy)	Derived	See XGS effective area (low-E QE & order sep)	Derived for OPG baseline design
Readout Frame Rate	> 100 frames s^{-1}	Derived	See XGS time resolution, full-spectrum count-rate capability	
Full field event rate	>8000 cts s^{-1}	Derived	See XGS full-spectrum count-rate capability	HDXI rate may be over-specification
Time resolution	200 ms			
Timing accuracy[a]	To within 0.1 s	To be discussed		Relative to UTC
Instrumental background on orbit (0.5–2.0 keV)	< TBD cts s^{-1} $arcsec^{-2}$ keV^{-1}	Derived	See XGS background	
Readout Filling factor	>TBD	Derived		From spectral coverage
Conformance to Rowland Torus	TBD	Derived		From sampling of LSF
Radiation tolerance	10 yrs at L2	Derived		From observatory lifetime reqt.
Optical/UV Blocking	TBD	Derived		From source characteristics, environment

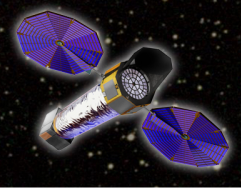

LXM Specs (Main Array)

Excluding central arcmin

SRB v3

LXM Main Array Parameter	Requirement (Red-Team Interim Report)	Requirement Traceability Status	Science Driver	Notes
Energy Range (keV) Minimum Maximum	 0.2 7 keV for 3 eV normal mode ~15 keV for 5 eV hi-E mode	 OK OK OK	Need to extend energy range to determine continuum for studying various AGN. At low end to see low temp. thermal emission or low energy non-thermal sources.	Low-res mode achieved by increasing the bath temperature
Quantum Efficiency (keV)	Area fill factor > 90% Vertical Q.E. > 95% at 7 keV?	Best achieve. Derived/ To be discussed	Maximization of effective area (counts) / minimization of observation times.	Limited by: - area fill-factor, - IR blocking filter design - absorber thickness (7 keV requirement would be good.)
Field of view	5x5 arcmin	OK	Characteristic size of many extended objects (SNR, galaxies and clusters of galaxies) for high-res imagining and spectroscopy	A few larger images can be acquired through mosaicking observations
Pixel size (arcsec)	1 x 1	OK	Removal of point sources to minimize background in diffuse emission, to study arc-second scale features such as shocks and filaments, & point sources in crowded regions (XRBs and stars)	Smaller pixels off axis not essential and would require too large many sensors to read out
Energy Resolution	• 3 eV (FWHM) (hi-res mode) • 5 eV (FWHM) (mid-res mode) • 10 eV (FWHM) (low-res mode)	OK	Line-separation /velocity accuracy to determine energetics and dynamics of plasmas.	Sufficient for required plasma diagnostics and energetics.
Count-rate capability	• 10 cps/hydra (0.1 mC) in hi-res mode (per 25 contiguous pixels) • 40 cps/hydra (0.4 mC) in mid-res mode • 150 cps/hydra (1.5 mC) in low-res mode	To be discussed	Accommodation of typical flux of interesting sources.	Essentially the count-rate per point source.

LXM Specs (Enhanced Main Array)

Central arcminute, excluding High-res inner array

SRB v3

LXM Enhanced Main Array Parameter	Requirement (Red-Team Interim Report)	Requirement Traceability Status	Science Driver	Notes
Energy Range (keV) Minimum Maximum	 0.2 7 keV for 3 eV normal mode ~15 keV for 5 eV hi-E mode	 OK OK OK	Need to extend energy range to determine continuum for studying various AGN. At low end to see low temp. thermal emission or low energy non-thermal sources.	Low-res mode achieved by increasing the bath temperature
Quantum Efficiency (keV)	Area fill factor > 90% Vertical Q.E. > 95% at 7 keV?	Best achieve. To be discussed	Maximization of counts / minimization of observation times	Limited by: - area fill-factor, - IR blocking filter design - absorber thickness (6 keV requirement would be good.)
Field of view	1x1 arcmin	OK	Minimum size of fine structure in objects requiring extremely high angular resolution, such as jets, centers of galaxies, and cores of clusters of galaxies.	
Pixel size (arcsec)	0.5 x 0.5	OK	Study of sub-arc-second scale features such as shocks and filaments, & point sources in crowded regions (XRBs and stars). Study of distribution of AGN within and around groups/clusters, removing AGN, study of thermodynamic properties of cluster gas. Feedback in in groups and clusters.	
Energy Resolution	• 2 eV (FWHM) (hi-res) • 4 eV (FWHM) (mid-res) • 10 eV (FWHM) (low-res)	OK OK	Line-separation /velocity accuracy to determine energetics and dynamics of plasmas. For z=1, when SMBH growth and AG feedback at peak, features red-shifted to 3-4 keV, requiring 1.5-2 eV resolution.	1.5 eV possible
Count-rate capability	• 40 cps/hydra (0.4 mC) in hi-res mode (per 25 contiguous pixels) • 160 cps/hydra (1.6 mC) in mid-res mode • 600 cps/hydra (6 mC) in low-res mode 20 cps/hydra (per 25 contiguous pixels)	To be discussed	Accommodation of typical flux of interesting sources.	Essentially the count-rate per point source.

LXM Specs (High-res Inner Array) SRB v3

LXM High-res Inner Array Parameter	Requirement (Red-Team Interim Report)	Requirement Traceability Status	Science Driver	Notes
Energy Range (keV) Minimum Maximum	0.2 7 keV for 3 eV normal mode ~15 keV for 5 eV hi-E mode	OK OK OK	Need to extend energy range to determine continuum for studying various AGN. At low end to see low temp. thermal emission or low energy non-thermal sources.	Low-res mode achieved by increasing the bath temperature
Quantum Efficiency (keV)	Area fill factor > 90% Vertical Q.E. > 95% at 7 keV?	Best achieve. To be discussed	Maximization of counts / minimization of observation times	Limited by: - area fill-factor, - IR blocking filter design - absorber thickness (6 keV requirement would be good.)
Field of view	20x20 arcsec	OK	Need to center AGN on this region	Size needed to center AGN in this region of the array based upon pointing accuracy.
Pixel size (arcsec)	0.5 x 0.5	OK	Study of sub-arc-second scale features such as shocks and filaments, & point sources in crowded regions (XRBs and stars)	
Energy Resolution	• 2 eV (FWHM) (hi-res mode) • 4 eV (FWHM) (mid-res mode) • 10 eV (FWHM) (low-res mode)	OK OK	Line-separation /velocity accuracy to determine energetics and dynamics of plasmas.	1.5 eV possible
Count-rate capability	• 20 cps/hydra (0.2 mC) in hi-res mode (per 4 contiguous pixels 1"x1") • 80 cps/hydra (0.8 mC) in mid-res mode • 300 cps/hydra (3 mC) in low-res mode	To be discussed	To do hi-res spectroscopy of point sources, studies of velocities of AGN winds, and flares from jets.	Feedback group suggested a few mC capability is necessary

LXM Specs (Ultra-high-res Array)

SRB v3

LXM Ultra-hi-res Array Parameter	Requirement (Red-Team Interim Report)	Requirement Traceability Status	Science Driver	Notes
Energy Range (keV) Minimum Maximum	 0.2 0.75	OK	To study faint diffuse baryons in emission, such as galactic halos	The highest energy resolution available for studies of velocities from lines up to O VIII. R~ 2000.
Quantum Efficiency (keV)	Area fill factor > 90% Vertical Q.E. > 99% at 0.75 keV IR blocking filter throughput is largest factor affecting detection efficiency.	OK	Maximization of counts / minimization of observation times	There are some trade-offs in filter designs - affecting whether 6 keV area is more important or area for energie below 0.6 keV.
Field of view	1x1 arcmin	To be discussed	To sample enough of the hot gas around galaxy halo gas	Need enough photons to measure velocities of outflows.
Pixel size (arcsec)	1 x 1	OK	To reduce the back-ground	To get the required energy resolution!
Energy Resolution	• 0.4 eV (FWHM) (hi-res mode) • 0.8 eV (FWHM) (mid-res mode) • 2 eV (FWHM) (low-res mode)	OK	Need R~ 2000 to measure velocities/turbulent broadening down to ~50 km/s (outflows and thermal velocities).	As good energy resolution as 0.3 eV may be possible.
Count-rate capability	• 80 cps/1" pixels (0.8 mC) • 320 cps/pixel (3.2 mC) in mid-res mode • 1000 cps/pixel (10 mC) in low-res mode	To be discussed	No driver. Pixel design naturally does this.	Will naturally be very high - will try to develop to make lower to make it easier to read out. Count rates capability may be reduced by X-rays beyond 0.75 keV

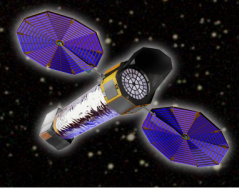

LXM Specs (Extended Array)

SRB v3

LXM Extended Array Parameter	Requirement (Red-Team Interim Report)	Requirement Traceability Status	Science Driver	Notes
Energy Range (keV) Minimum Maximum	 0.2 2.0	OK	Galactic halos and outskirts of clusters and groups galaxies. Line intensity mapping	Pixels will not be deigned to have high QE above 2 keV.
Quantum Efficiency (keV)	Area fill factor > 98% Vertical Q.E. > 60% at 2 keV >98% at 1 keV IR blocking filter throughput is largest factor affecting detection efficiency.	Derived	Maximization of counts / minimization of observation times	There are some trade-offs in filter designs - affecting whether 6 keV area is more important or area for energie below 0.6 keV.
Field of view	20x20 arcmin	To be discussed	Need large grasp to efficiency map out large extended regions.	
Pixel size (arcsec)	5 x 5	To be discussed	The removal of point sources contaminating measurements.	Is it known that 5" pixels are really needed rather than 10"?
Energy Resolution	• 1 or 2 eV (FWHM) (hi-res mode) • 2 or 4 eV (FWHM) (mid-res mode) • 4 or 8 eV (FWHM) (low-res mode)	To be discussed	Plasma diagnostics. Separation of source/background emission.	This is the biggest question that needs to be answered!!! It's a cost trade-off.
Count-rate capability	• 20 cps/5" pixel (0.2 mC) or 20 cps/hydra (2 eV) • 80 cps/pixel (0.8 mC) in mid-res mode • 300 cps/pixel (3 mC) in low-res mode	To be discussed	No driver -	No driver - need to make slow to make this possible to read out.

Backup

Missing Requirements for LXM

Requirements needed/ Potential science drivers	Current spec	Implied capability
Energy Resolution of Extended Array What is *min.* distance at which hot halo lines must be distinguished from Galactic emission?	1 or 2 eV	D_{min} ~ 8 or 16 Mpc
Count-rate capabiity of High-res inner array What is brightest (point) source for which 2 eV spectral resolution is required?	20 ct/s	**TBD**
Field of view of Ultra High-res array What is the max angular size of objects for which 0.4 eV spectral resolution is required?	1x1 arcmin	1 arcmin
Throughput at 6 keV in Main, Enhanced & High-Res Inner Arrays What Fe-K line science drives LXM design?	TBD	**TBD**